RIHO

Panel Nora

IP00011.2
Art.no: 110102003

130601010	130805085	ZA110601010028	ZA110601010045
3x (3.9x32mm)	3x (ø8mm)	1x	1x
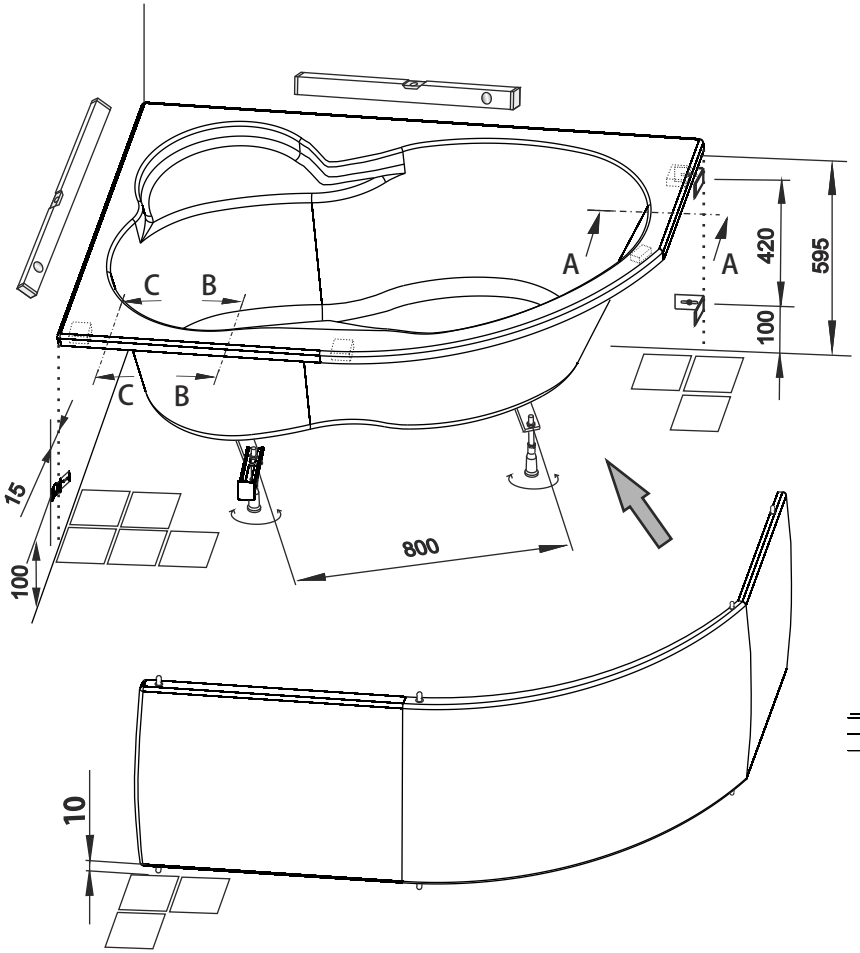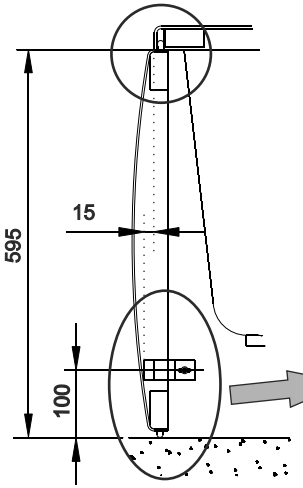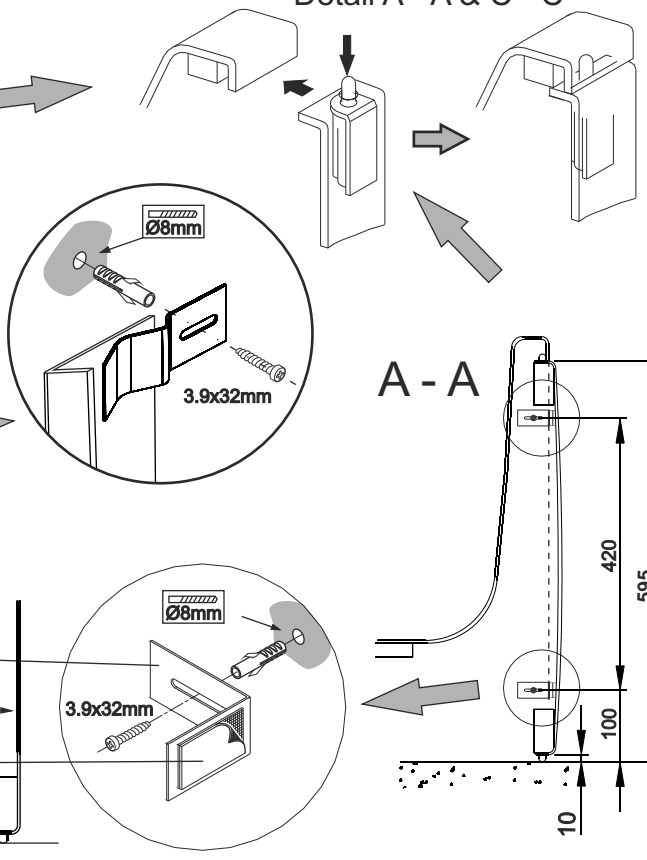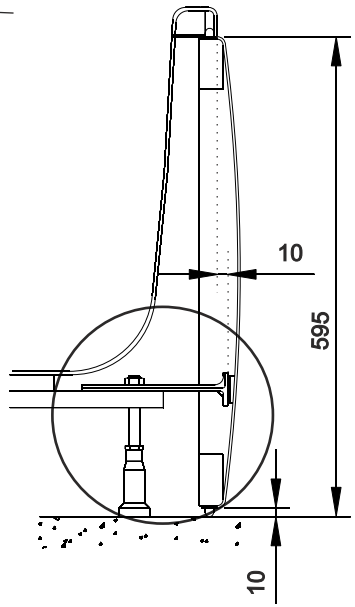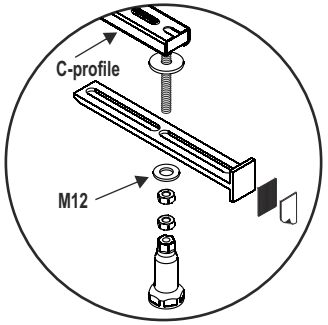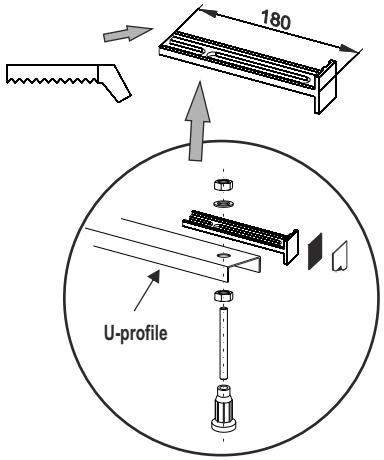
ZA200202011200	131705225	160060025	
1x	6x	2x	1x