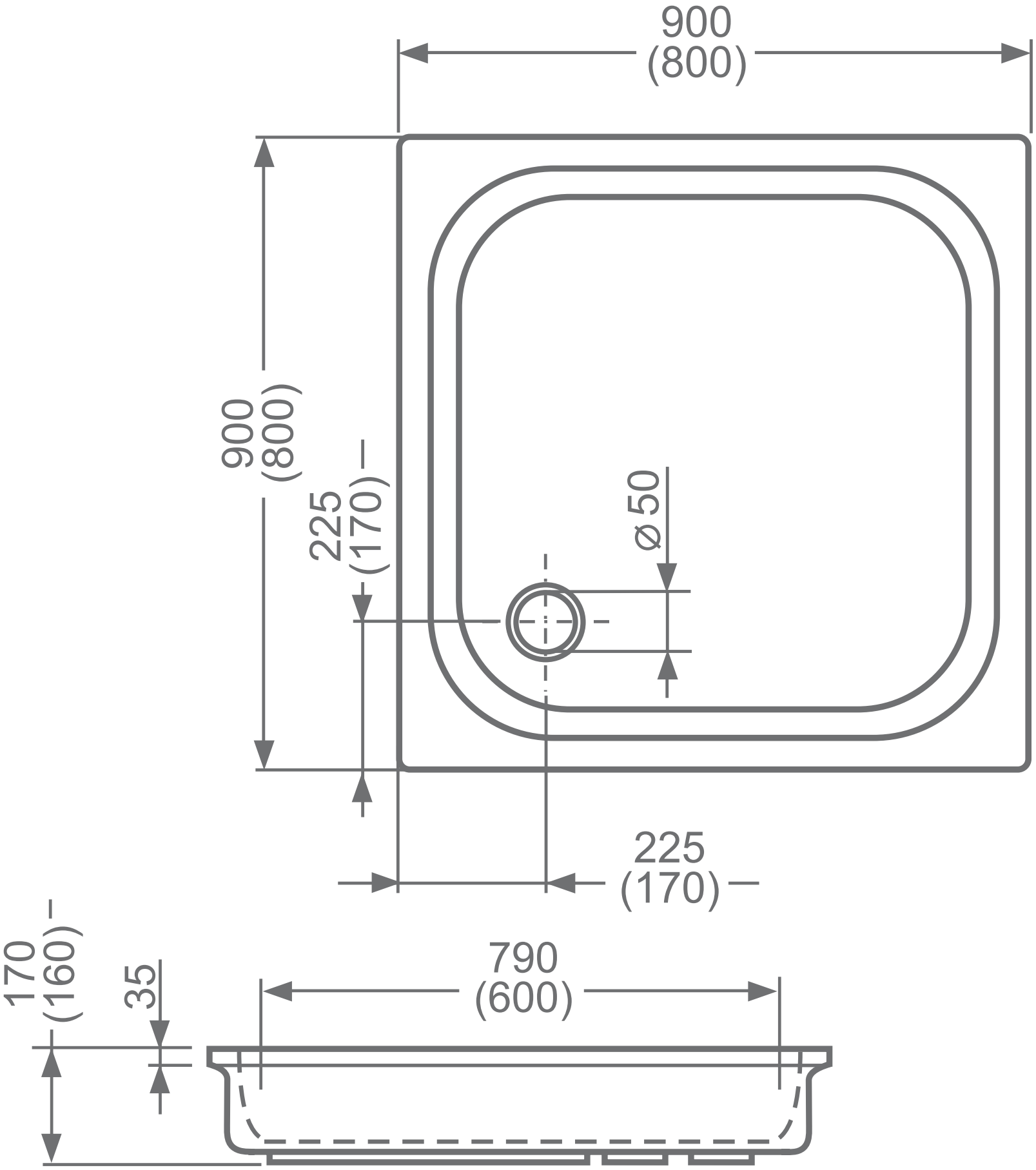
900
(800)
900
(800)
225
(170)
ø 50
225
(170)
170
(160)
35
790
(600)