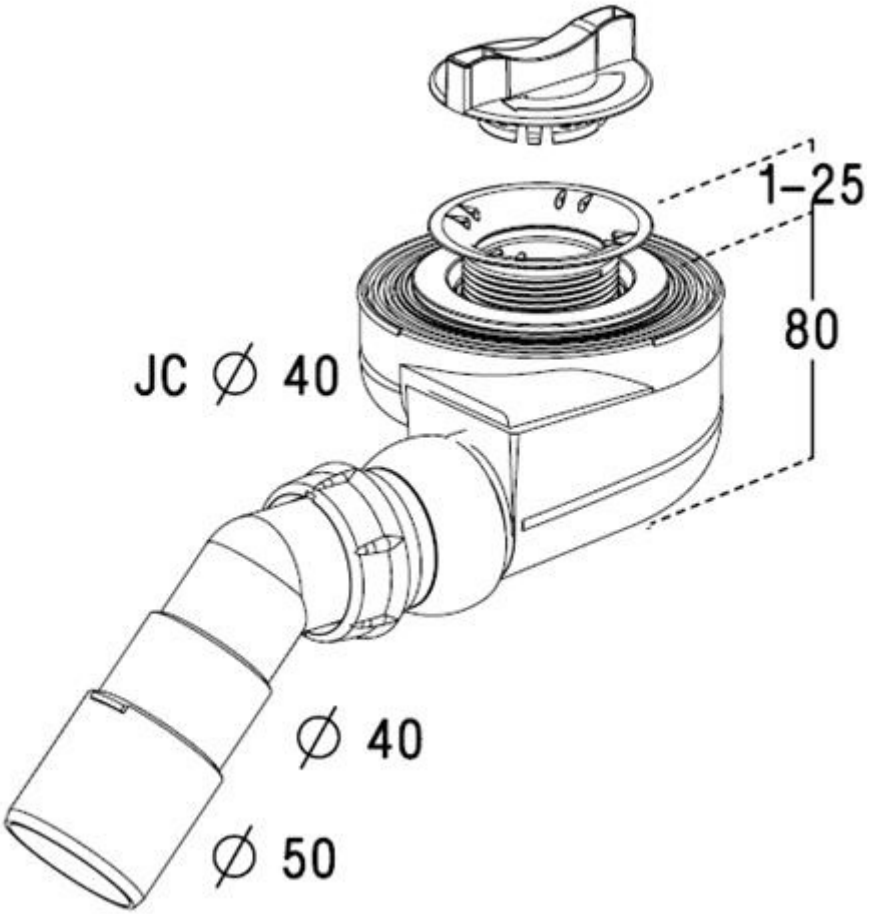
1–25
80
JC ∅ 40
∅ 40
∅ 50