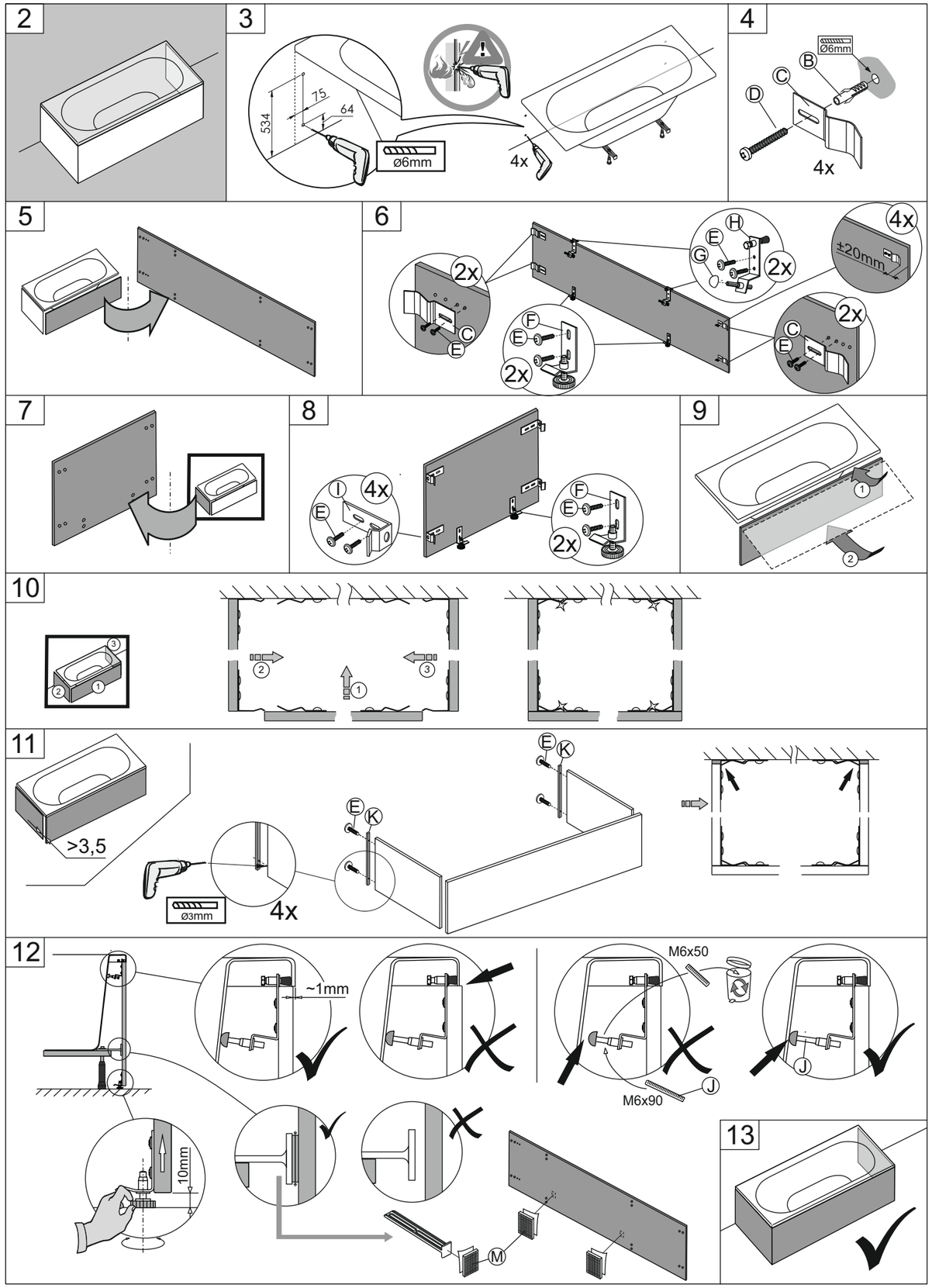

RIHO

Wooden bath front panels

IP00018.3

Art.nr.: 110102012

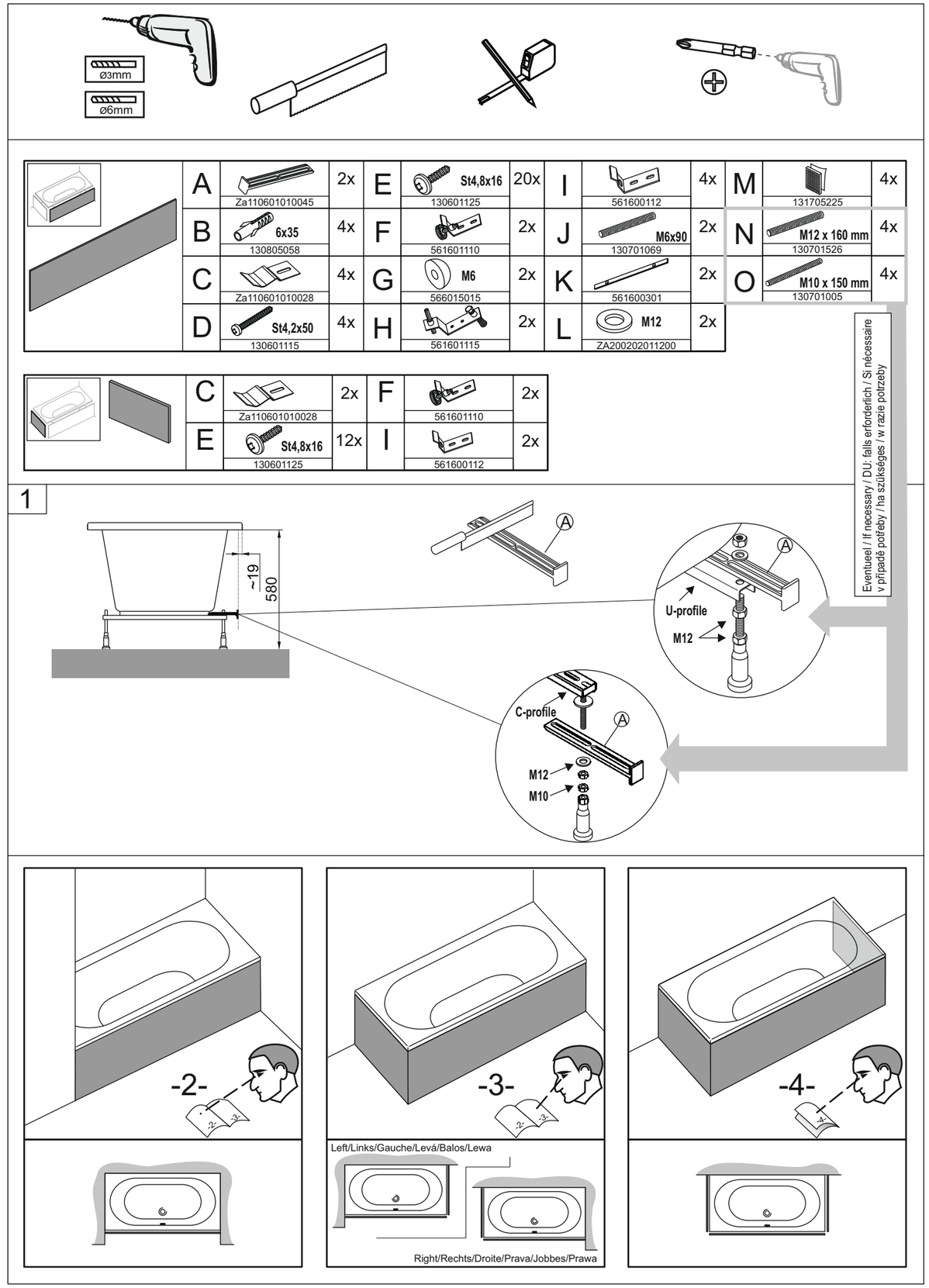

A	Za110601010045	2x	E	St4,8x16 130601125	20x	I	561600112	4x	M	131705225	4x
B	6x35 130805058	4x	F	561601110	2x	J	M6x90 130701069	2x	N	M12 x 160 mm 130701526	4x
C	Za110601010028	4x	G	M6 566015015	2x	K	561600301	2x	O	M10 x 150 mm 130701005	4x
D	St4,2x50 130601115	4x	H	561601115	2x	L	M12 ZA200202011200	2x			

C	Za110601010028	2x	F	561601110	2x
E	St4,8x16 130601125	12x	I	561600112	2x

Eventueel / If necessary / DU: falls erforderlich / Si nécessaire v případě potřeby / ha szükséges / w razie potrzeby

1

~19
580
A
A
U-profile
M12
C-profile
A
M12
M10

-2-

-3-

Left/Links/Gauche/Levá/Balos/Lewa

Right/Rechts/Droite/Prava/Jobbes/Prawa

-4-

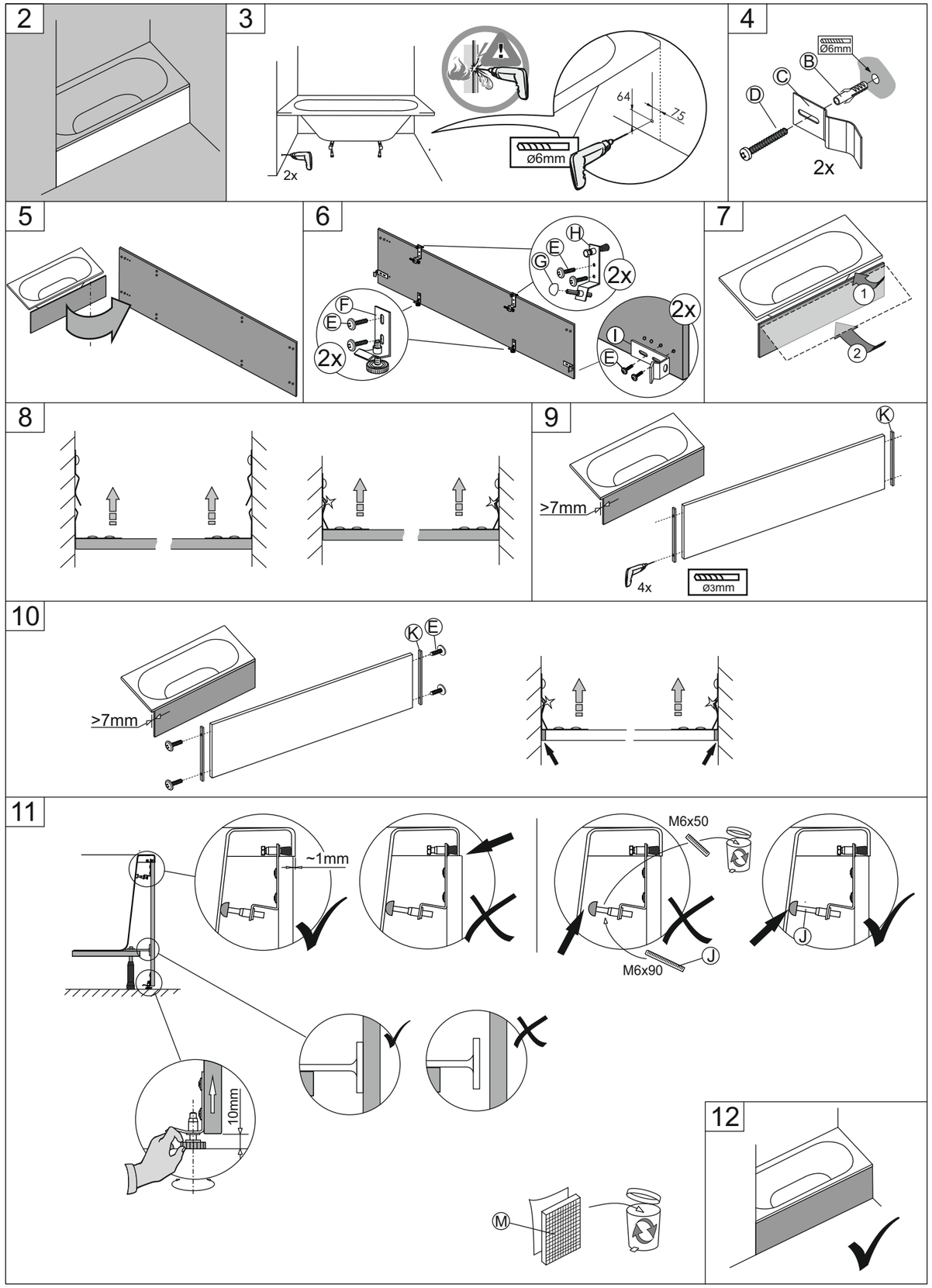
2
3
2x
64
75
ø6mm
4
Ø6mm
B
C
D
2x
5
6
H
G
E
2x
F
E
2x
I
E
2x
7
1
2
8
9
K
>7mm
4x
ø3mm
10
K
E
>7mm
11
~1mm
M6x50
M6x90
J
J
10mm
M
12

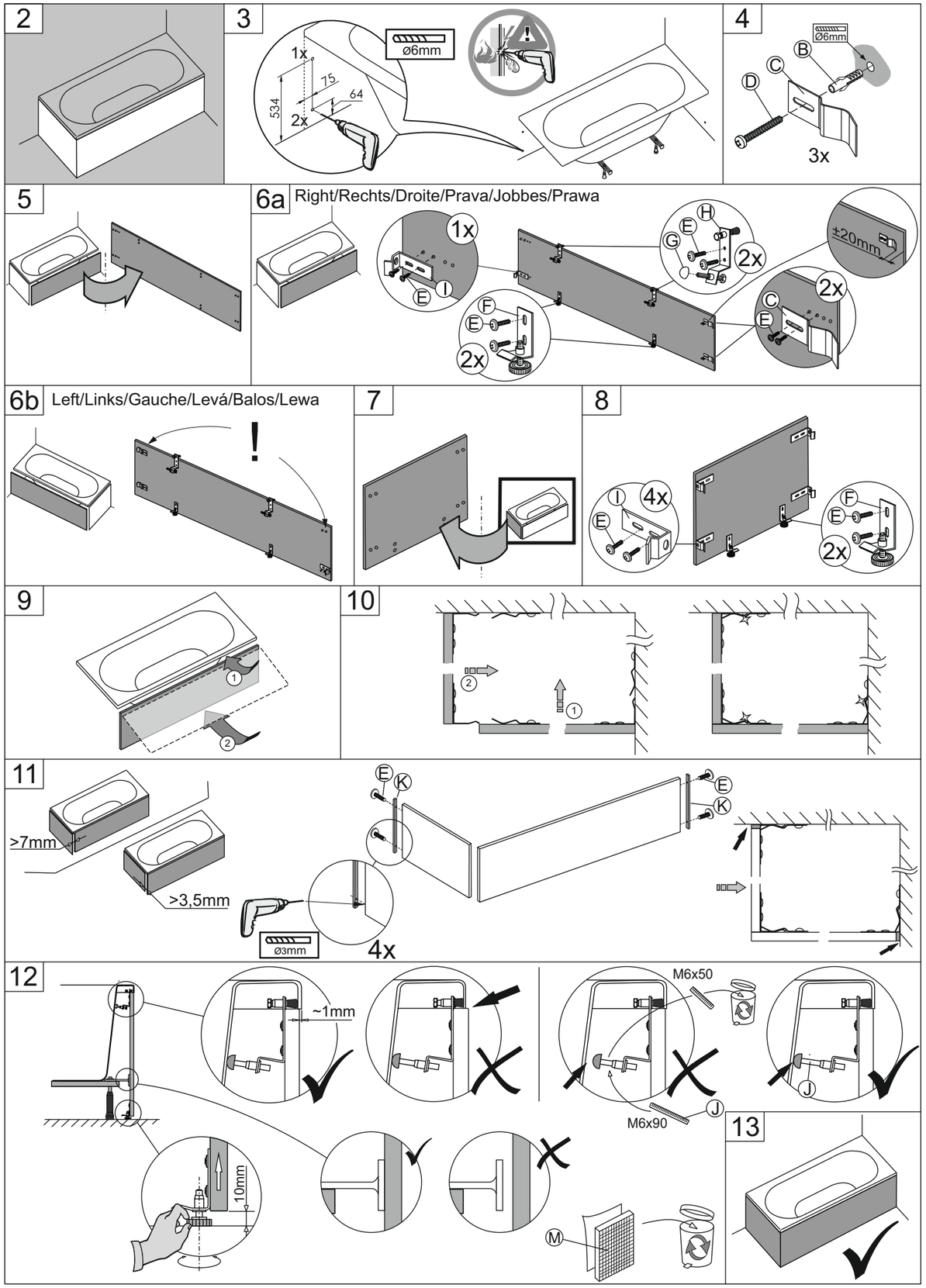
2
3
1x
534
75
64
2x
ø6mm
4
Ø6mm
B
C
D
3x
5
6a
Right/Rechts/Droite/Prava/Jobbes/Prawa
1x
E
I
H
E
G
2x
±20mm
2x
C
E
F
E
2x
6b
Left/Links/Gauche/Levá/Balos/Lewa
!
7
8
I
4x
E
F
E
2x
9
1
2
10
2
1
11
>7mm
>3,5mm
ø3mm
4x
E
K
E
K
12
~1mm
M6x50
M6x90
J
J
10mm
M
13